Robotic disassembly and autonomous remanufacturing

Duc Pham
University of Birmingham

Contents

1. What is Remanufacturing?

CRR - Centre for Remanufacturing and Reuse, Oakdene Hollins

http://www.remanufacturing.org.uk/index.php

- *… the process of returning a used product to* ***at least*** *its original performance with a warranty that is equivalent to or better than that of the newly manufactured product. From a customer viewpoint, the remanufactured product can be considered the same as a new product.*

ERN – European Remanufacturing Network

https://www.remanufacturing.eu/remanufacturing/about-remanufacturing/

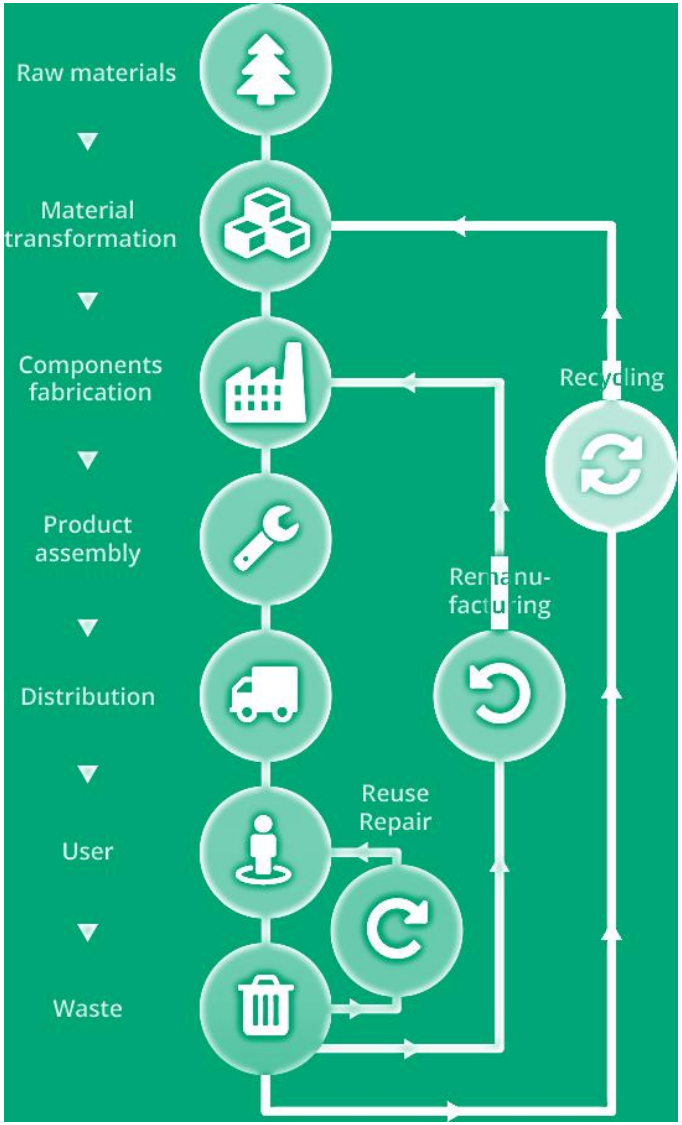

Product lifecycle

Remanufacturing and the Circular Economy

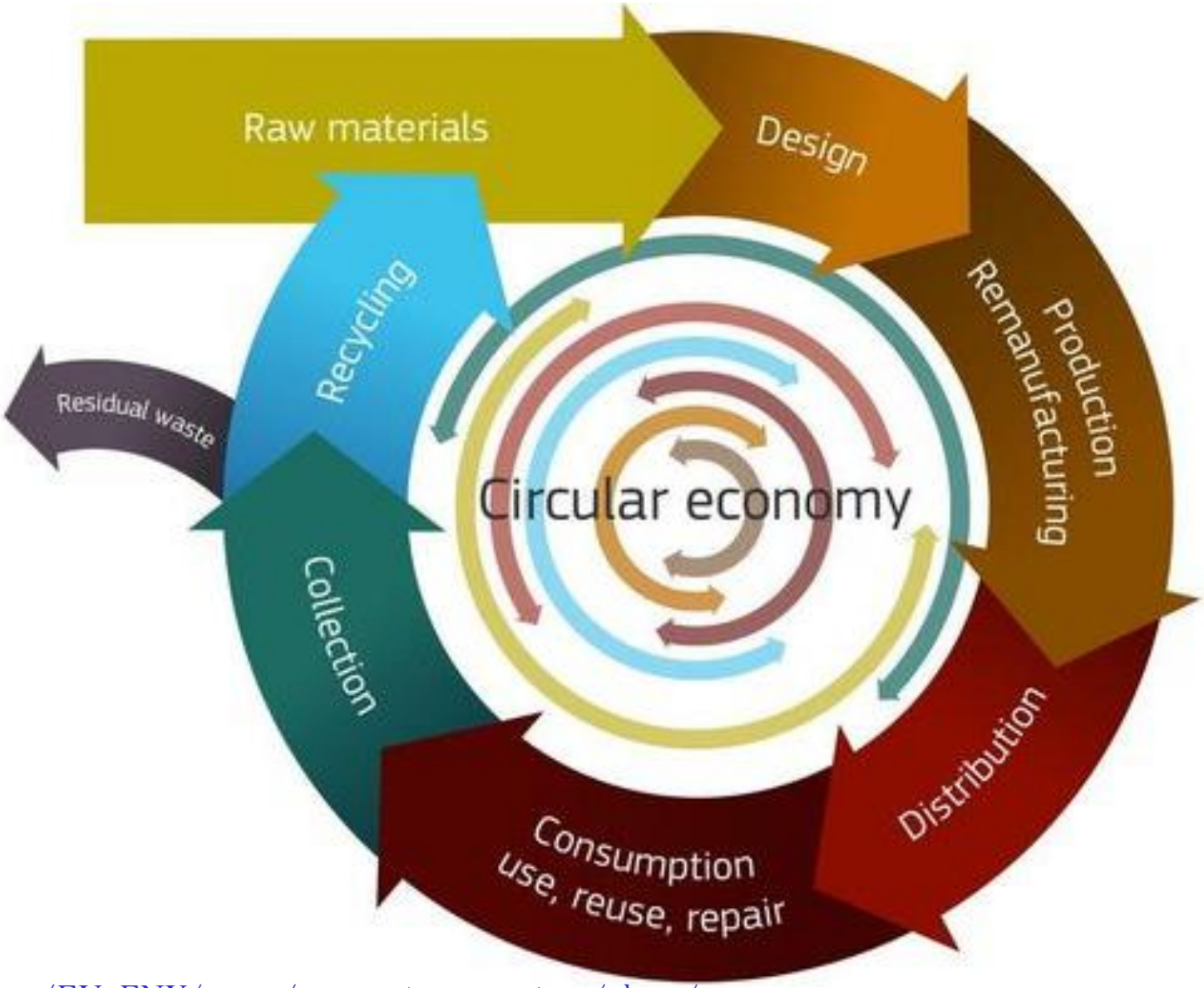

https://twitter.com/EU_ENV/status/473860526926475264/photo/1

2. Why Remanufacture?

All-Party Parliamentary Sustainable Resource Group, 2014

- *Even the most conservative estimates suggest that the potential of remanufacturing in the UK is* ***£5.6billion****.*
- *The* ***United States*** *is a leader in the field of remanufacturing, with* ***China*** *also recently investing heavily in the industry.*
- *Existing drivers that spur on remanufacturing include lower input* ***costs*** *and subsequent* ***lower prices*** *for customers,* ***resource security*** *and* ***resilience*** *in a volatile world,* ***reduced carbon emissions*** *and* ***reduced water and energy*** *use.*

Karmenu Vella, EU Commissioner for the Environment, *The circular economy – an investment with a triple win* (Adjacent Government, 9 May 2016)

- *A shift towards a circular economy could bring savings of €600bn for EU businesses, and reduce greenhouse gas emissions by 2 to 4% every year.*

Energy and Material Savings

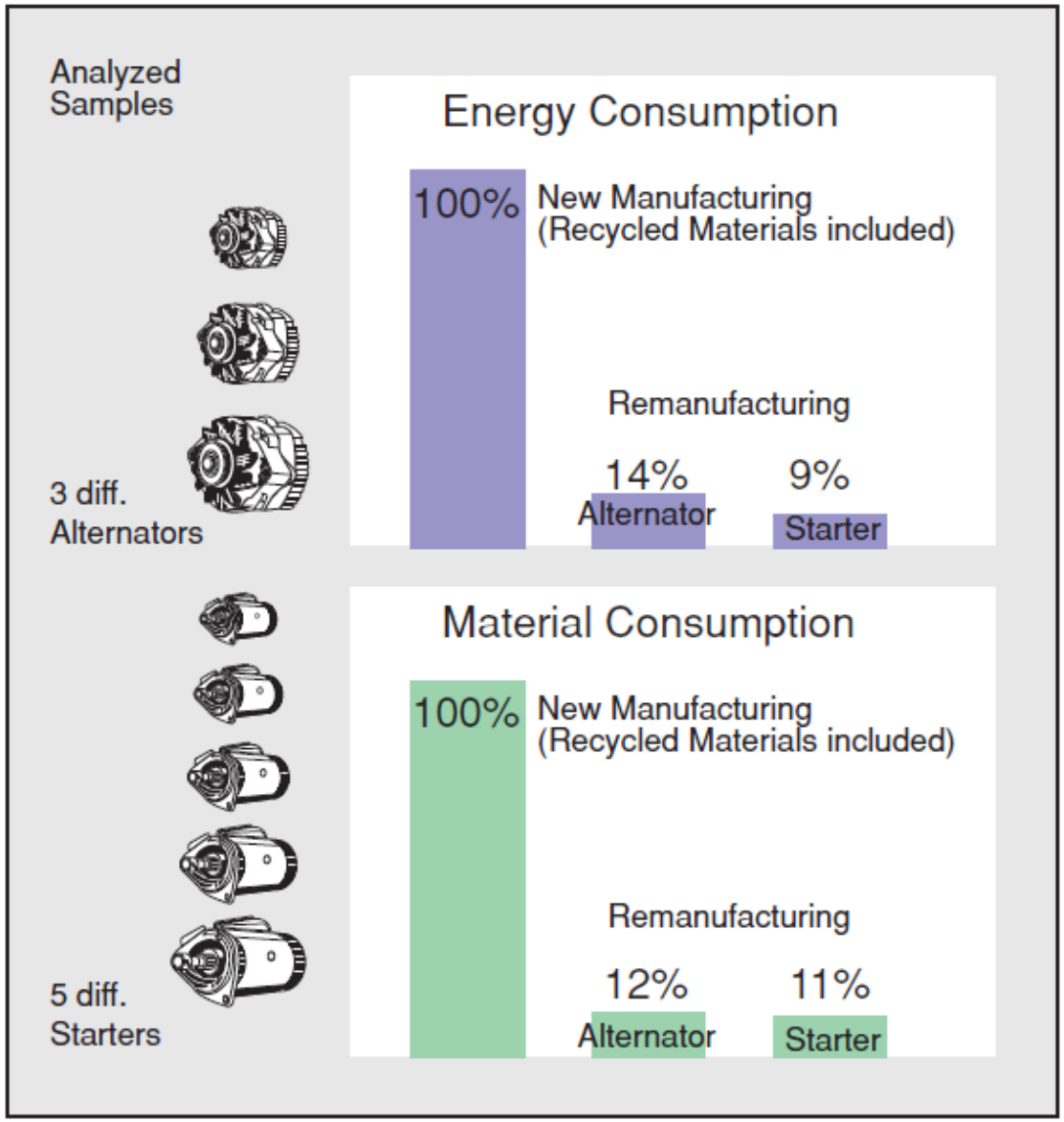

(Steinhilper 1998)

Remanufacturing Fact Sheet

- More than 30,000 tons of metal recycled each year
- More than 40,000 tons of core returned to Meritor remanufacturing facilities annually
- More than 18,000 gearing units remanufactured annually
- Over 20,000 brakes shoes remanufactured daily

Why Remanufacture?

Favourable Environmental Footprint...

Cylinder Head*	Reman vs. New
Green House Gas	61% less
Water use	93% less
Energy use	86% less
Material use	90% less
Landfill space	> 99% less

* 2006 Cat study, 3412 cylinder head

Win-win-win situation

- Manufacturers benefit

Cost

35-60% of new

- The environment benefits

Energy

20-25% of new

- Society benefits

www.hssmi.org © 2015

Energy savings

233 oil tankers

Raw material savings

155,000 train carriages

Industry size

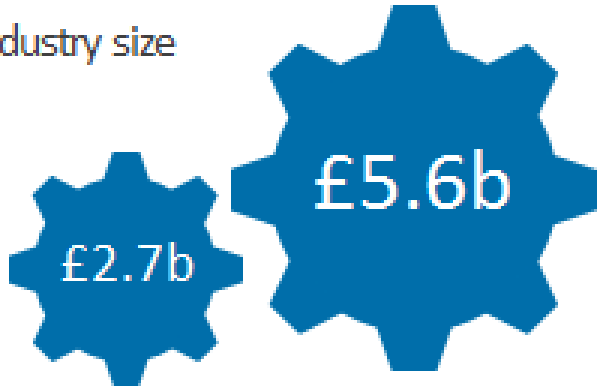

Current Potential

Disassembly in Remanufacturing

Collected cores

Shipped products

Disassembly

Reassembly

Cleaning & Drying

Repair & Testing

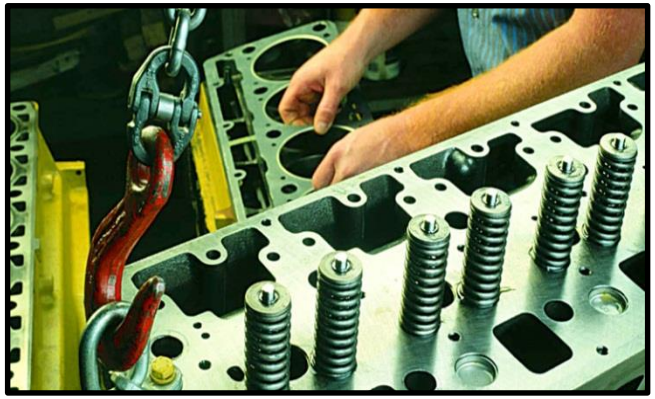

CAT C-15 Engine Teardown

2. Aims and Vision

- Robotic disassembly to address bottleneck in remanufacturing.
- Fundamental understanding of disassembly processes to create robust autonomous disassembly systems.
- Scientific multi-disciplinary approach to disassembly problems to derive knowledge and understanding of disassembly.

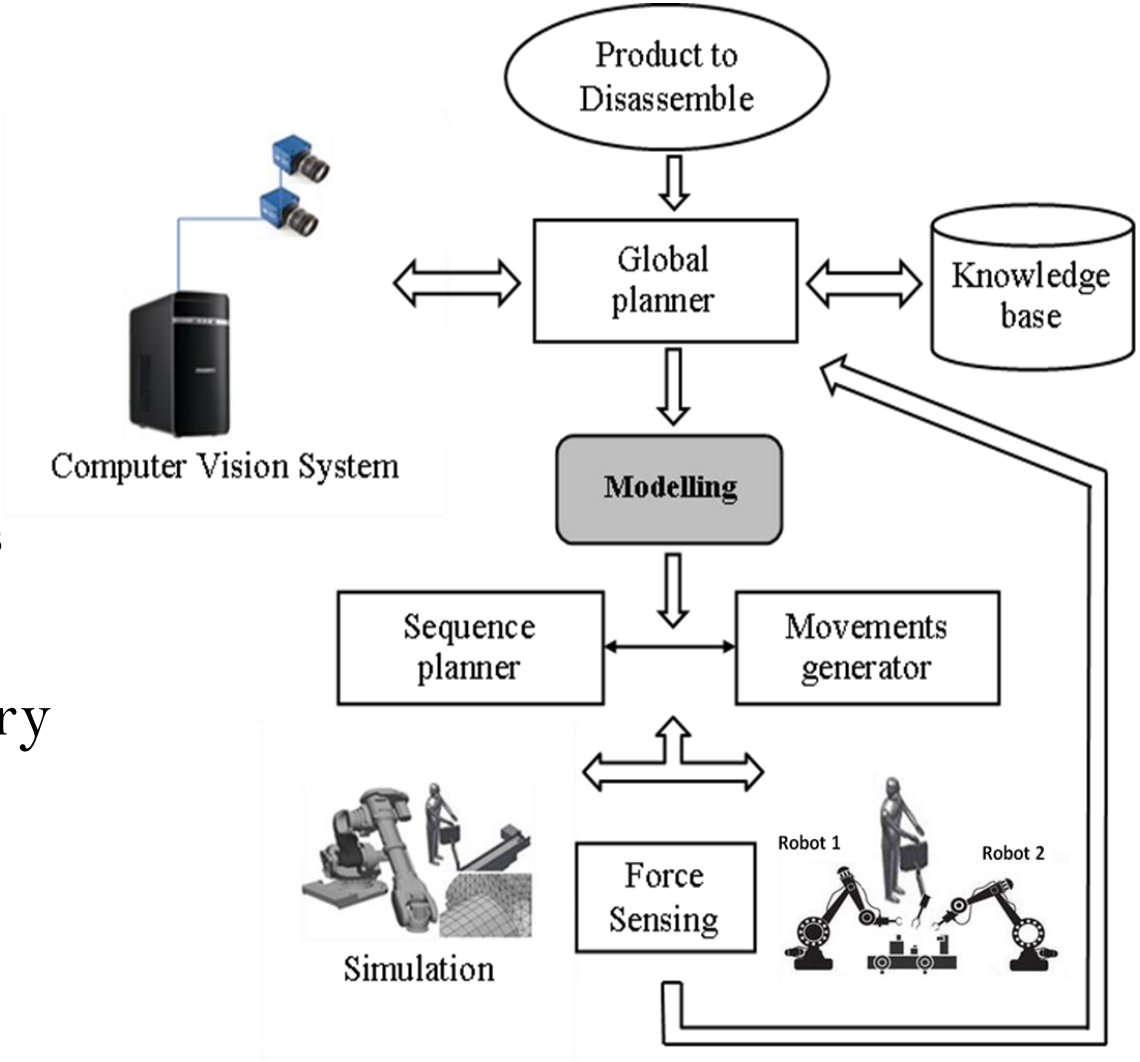

3. Research Programme and Interim Results

Five work packages:

- **WP 1.** Disassembly science.

  Study disassembly processes to determine patterns recurring in disassembly problems and the physical and cognitive efforts needed.

- **WP 2.** Practical disassembly strategies.

  Develop accommodation strategies to enable robots to perform selected disassembly tasks autonomously.

- **WP 3**. Disassembly planning.

  Develop disassembly sequence planning and replanning systems using product CAD data and scientific planning rules.

- **WP 4**. Collaborative disassembly.

  Develop optimal collaboration strategies exploiting the complementarity of robots and humans to achieve complex operations.

- **WP 5**. Practical demonstrations.

Disassembly Operation Survey





Products	Electrical motors	Power hand tools	Automotive parts*	Engines	Small appliances
Quantity	10	7	61	9	27
Total ops	294	192	1698	790	619
Unscrewing	165 (56.1%)	94 (49.0%)	646 (38.0%)	401 (50.8%)	245 (39.6%)
Separation	76 (25.9%)	43 (22.4%)	574 (33.8%)	212 (26.8%)	231 (37.3%)
Pulling	45 (15.3%)	51 (26.6%)	382 (22.5%)	161 (20.4%)	106 (17.1%)

* Excluding engines

Disassembly Operation Survey




Products	Domestic appliances	General mechanical products	Small devices	Miscellany
Quantity	8	58	28	5
Total ops	247	1842	460	253
Unscrewing	120 (48.6%)	806 (43.8%)	113 (24.6%)	142 (56.1%)
Separation	58 (23.5%)	645 (35.0%)	195 (42.4%)	78 (30.8%)
Pulling	63 (25.5%)	354 (19.2%)	126 (27.4%)	23 (9.1%)

Disassembly Operation Survey

Total Products	213
Total Operations	6395
Unscrewing	2732 (42.72%)
Separation	2112 (33.03%)
Pulling	1311 (20.50%)

Modelling of disassembly operations

- Removal of Pins from Holes

(Jamming , wedging)

- Separation of press-fit components

(*Hard contact, Frictional*)

- Contact stress and deformations

(Stress concentration, shape deflection)

- Strategies to prevent damage to components

(Hydraulic disassembly, Thermal disassembly)

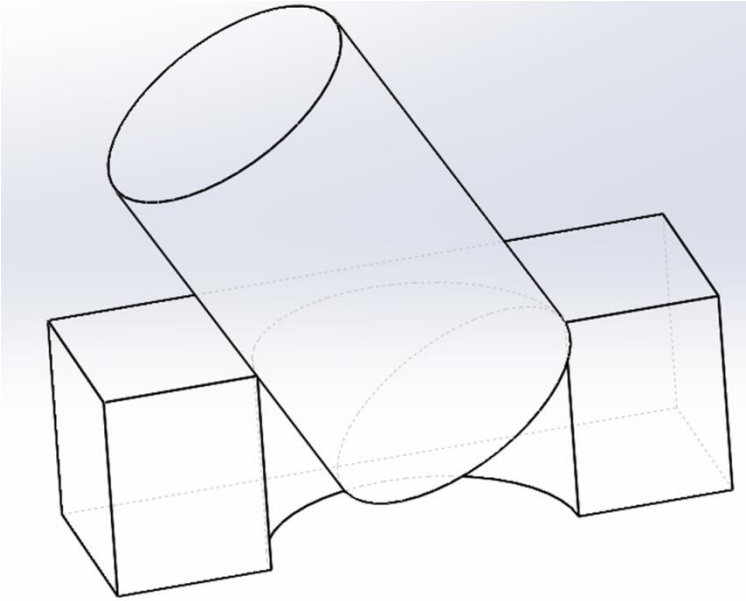

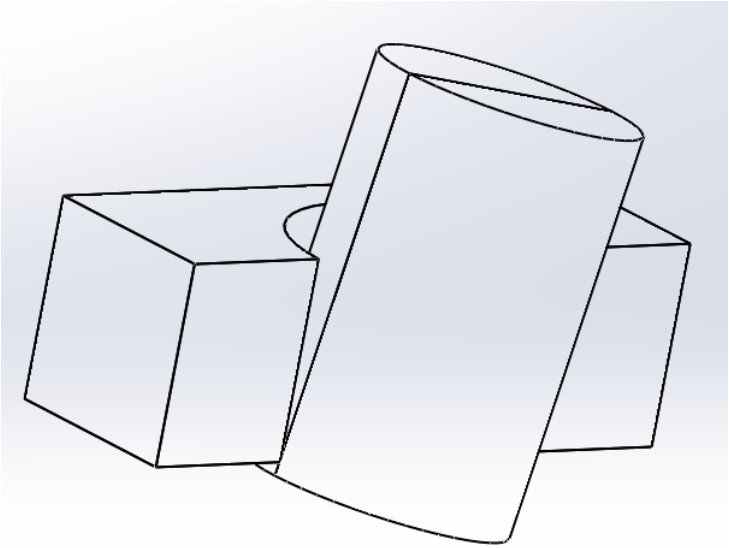

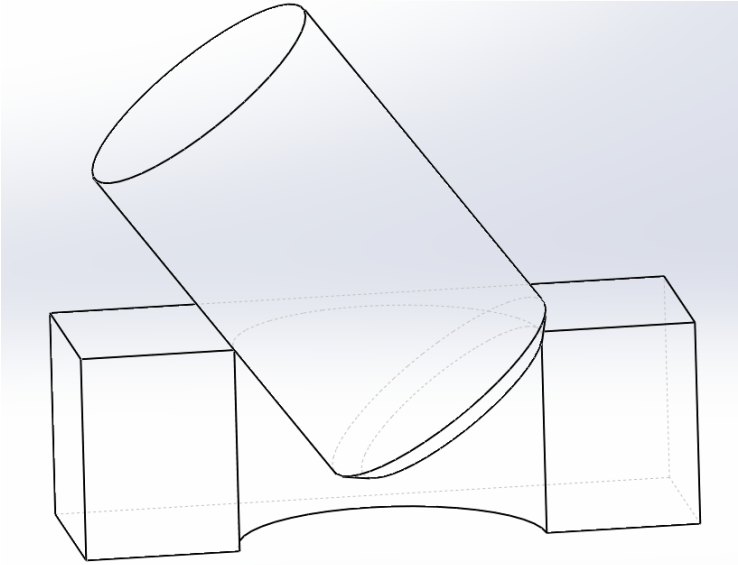

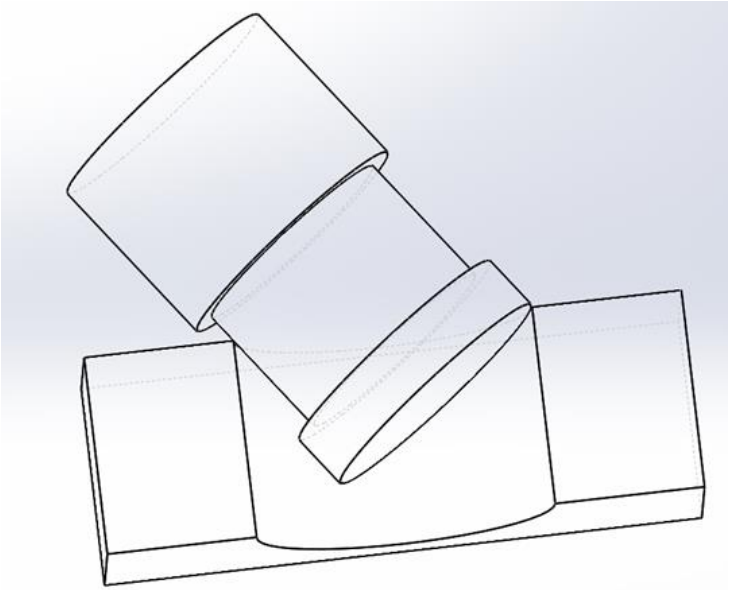

Quasi-Static Modelling

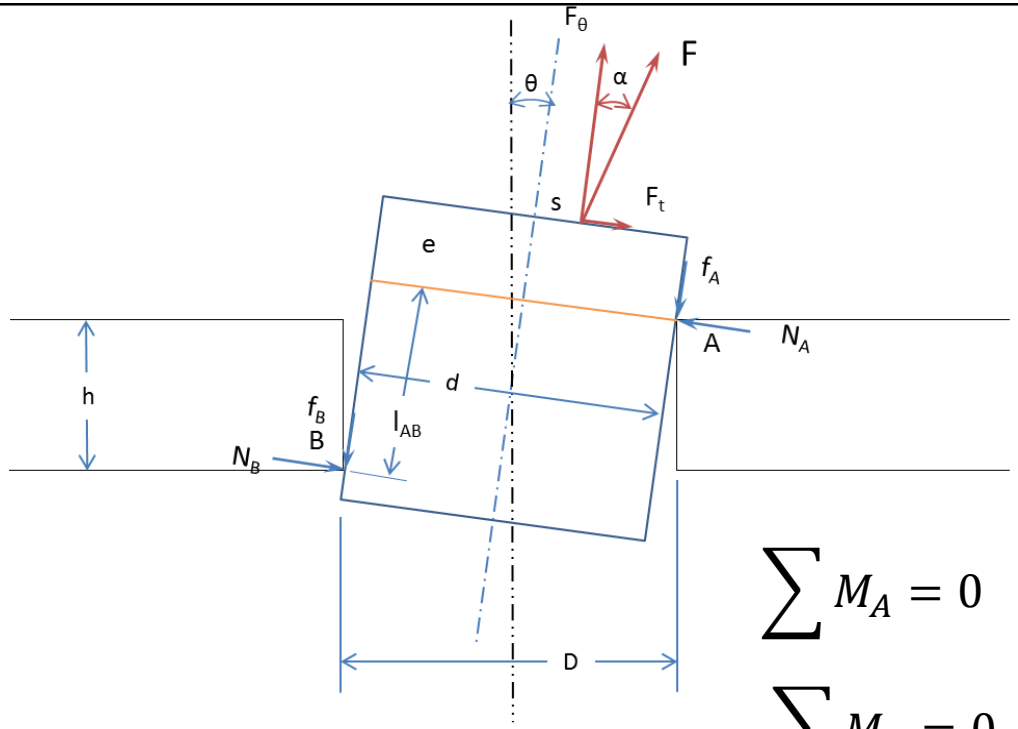

$$\sum M_A = 0 \qquad f_B \cdot d + N_B \cdot l_{AB} - F_\theta \cdot \frac{d}{2} = 0 \qquad (1)$$

$$\sum M_B = 0 \qquad -f_A \cdot d + N_A \cdot l_{AB} + F_\theta \cdot \frac{d}{2} = 0 \qquad (2)$$

$$\sum F_\theta = 0 \qquad -f_A - f_B + F_\theta = 0 \qquad (3)$$

From (1) & (2), $N_B(\mu d + l_{AB}) = N_A(\mu d - l_{AB})$,

From (3), $F_\theta = \mu \cdot (N_A + N_B)$

FEA simulation of peg-hole for robotic disassembly

- **Peg-in-hole with chamfers**

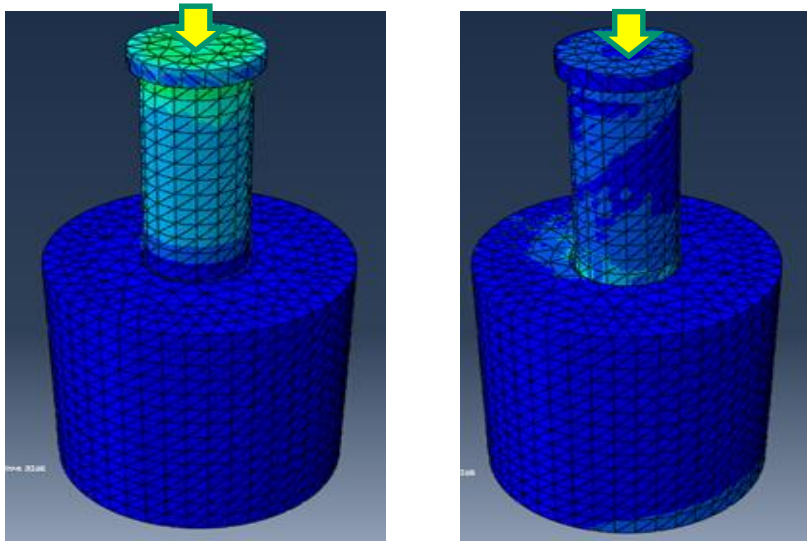

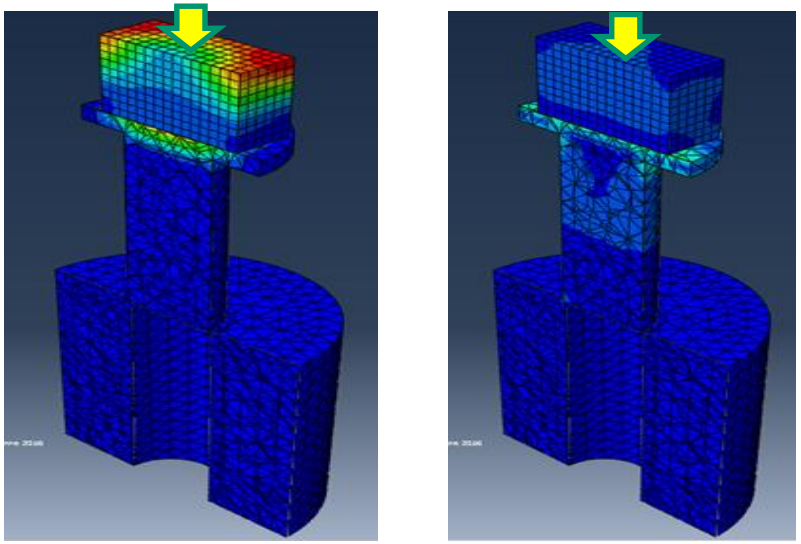

  - **Insertion with chamfers** (Jamming)
  - **Insertion using soft RCC** (No jamming)

- **Separation**: To remove bearing disc from drive shaft

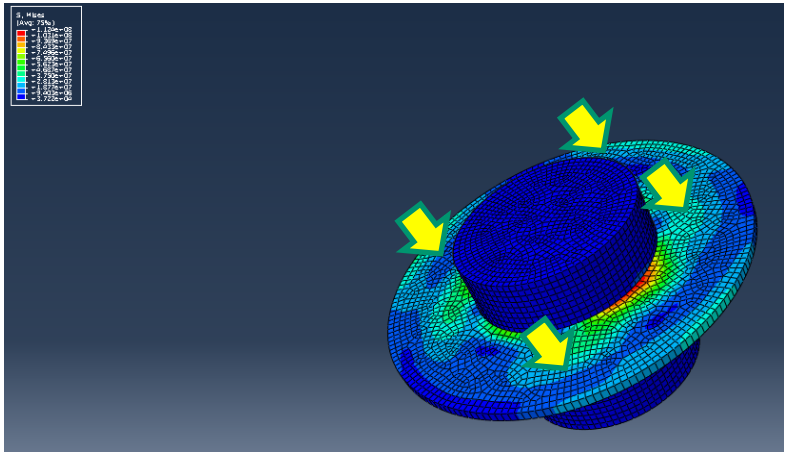

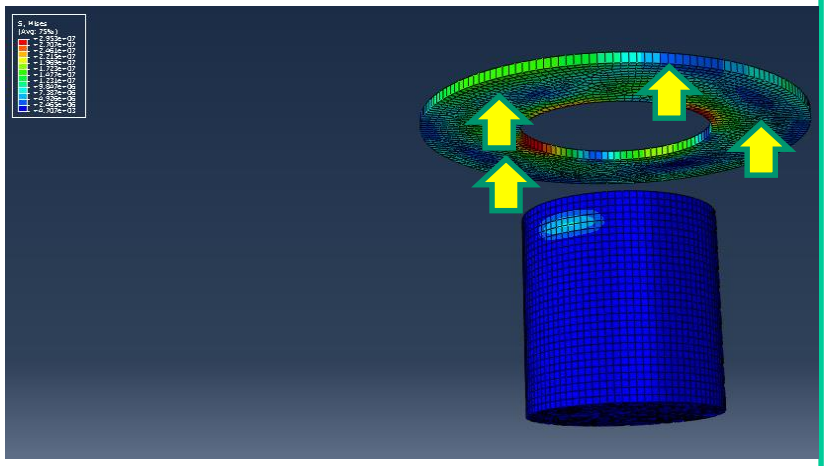

  - **Pushing operation** (Wedging)
  - **Pulling operation** (No wedging)

Investigation of peg-hole separation

Rotating and pulling
0.166mm/s

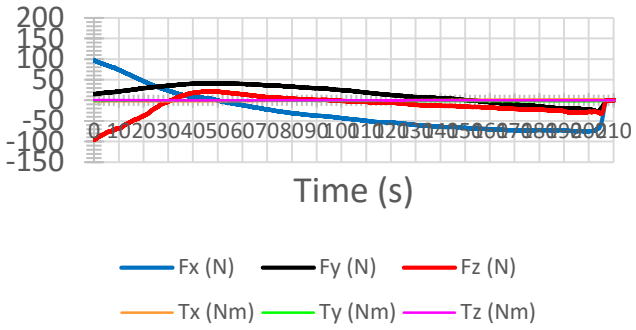

Straight pulling
1mm/s

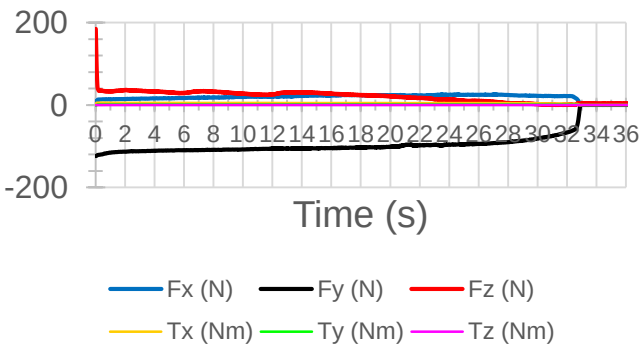

Test stage

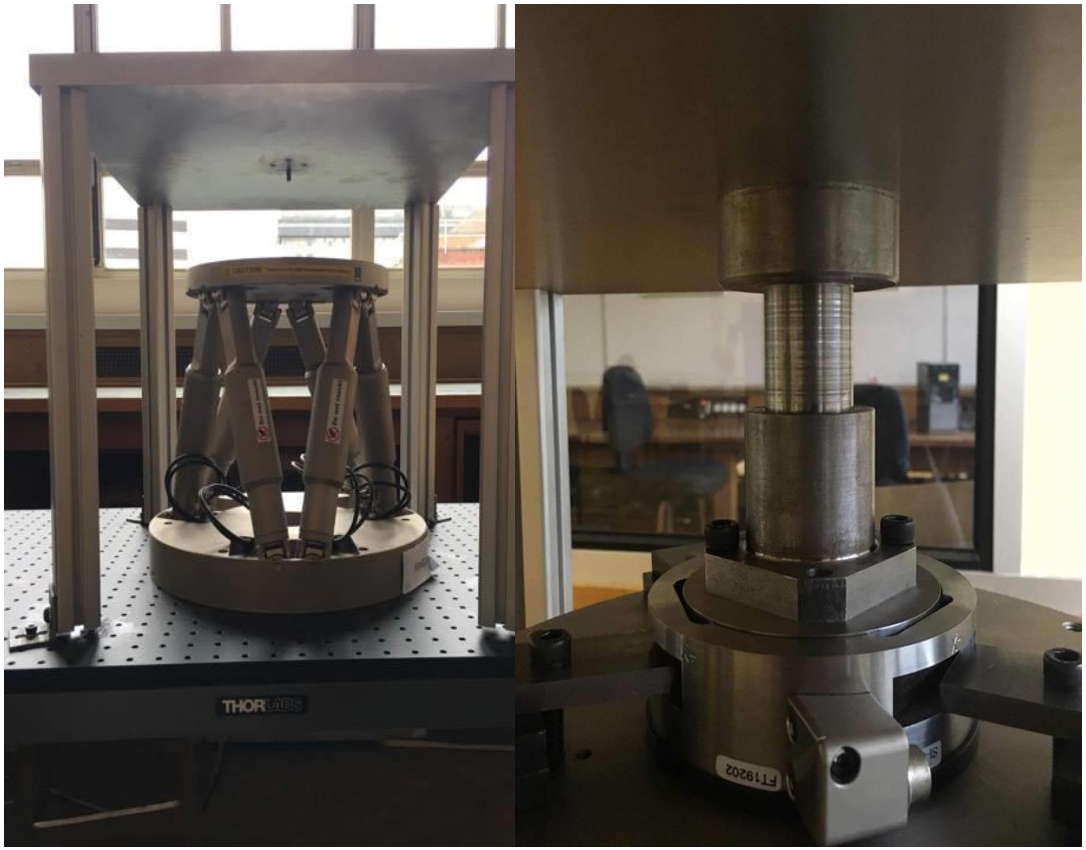

Contact Stress Modelling

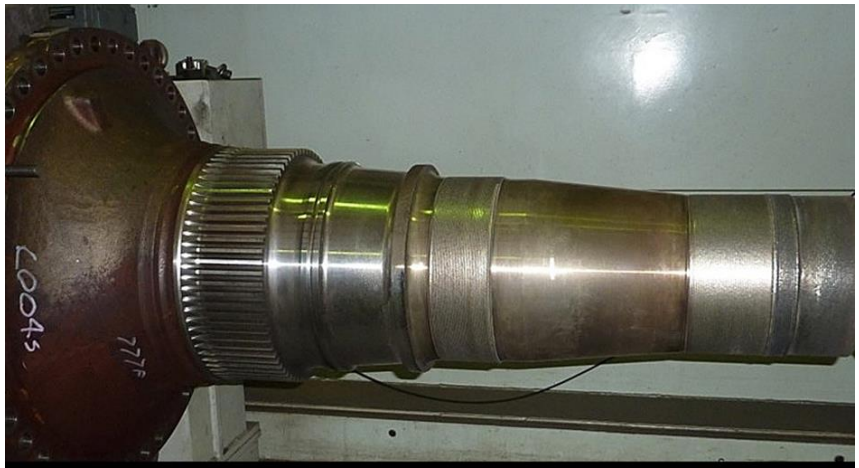

CAT 777F Wheel Spindle after LaserBond Cladding of Bearing Journal

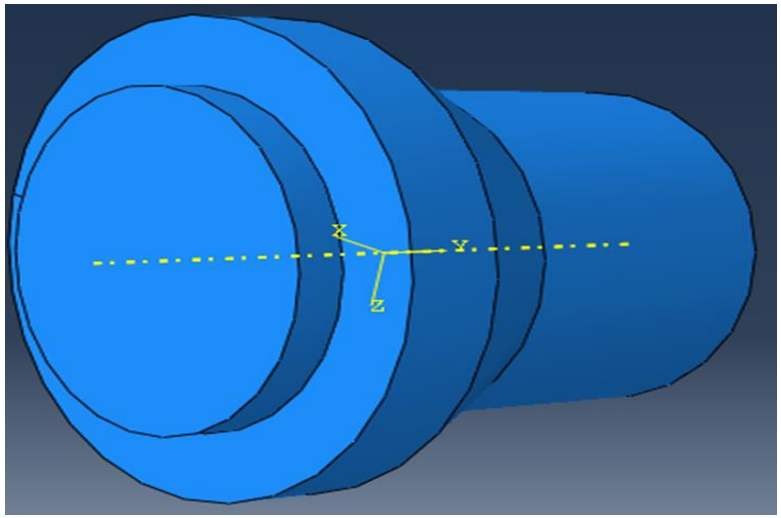

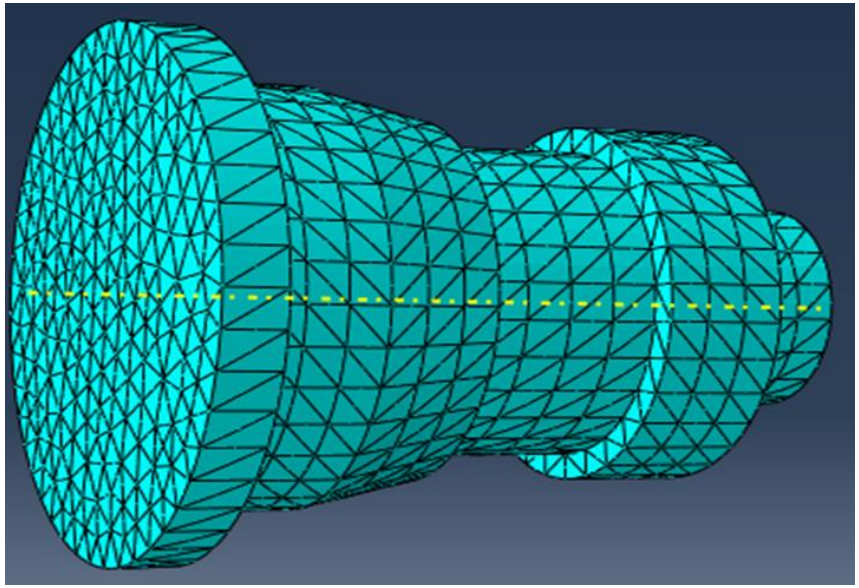

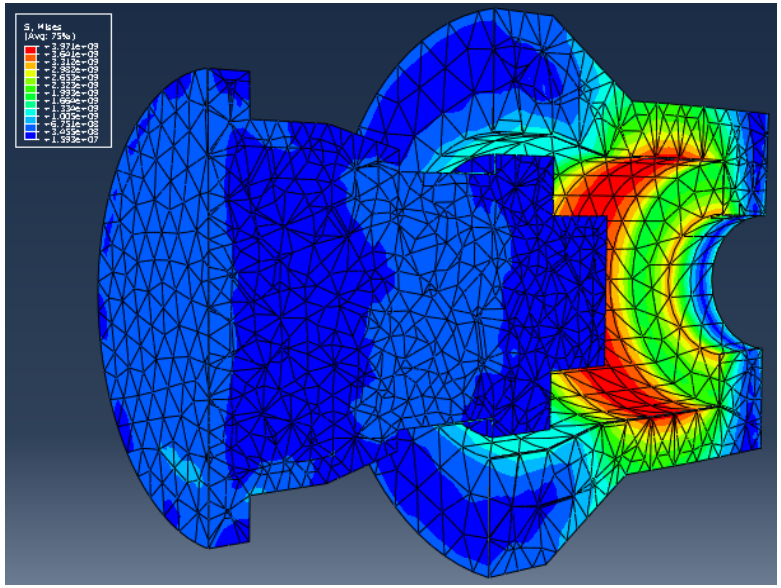

FEA element: Tetrahedral C3D20; **Interaction**: Surface contact with friction μ=0.1; **End push** with internal pressure

Strategies for Collaborative Disassembly

- Autonomous and semi-autonomous disassembly
- Reactive strategies *(Passive accommodation; active impedance)*
- Deliberative strategies (*Sensor-driven knowledge-based control; fuzzy logic control; ANFIS learning control)*
- Blind search (*Ultrasonic vibration)*

Collaborative Disassembly

- Two forms of collaboration

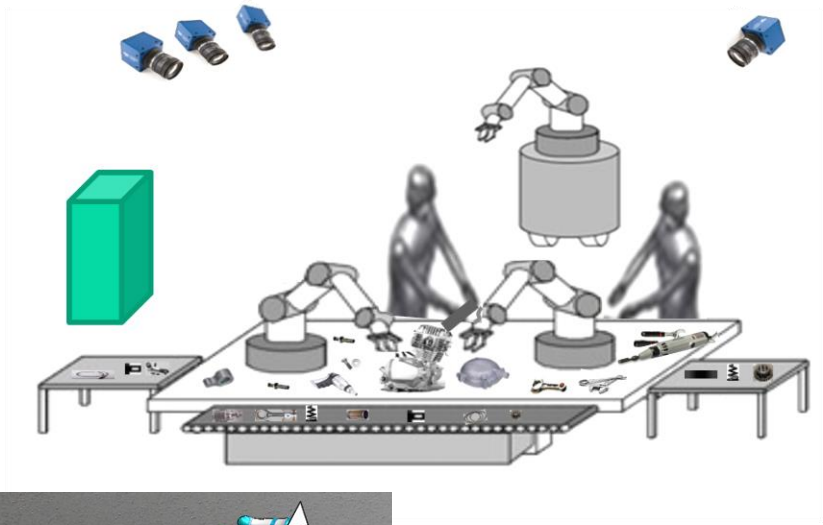

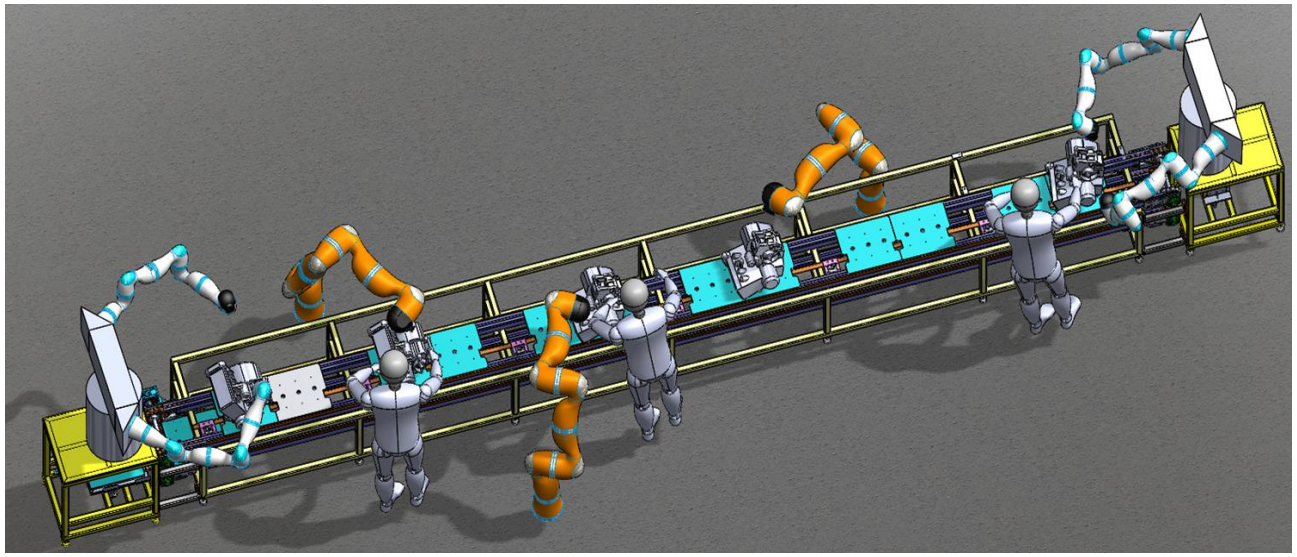

- A hybrid disassembly line

Passive Accommodation – RCC

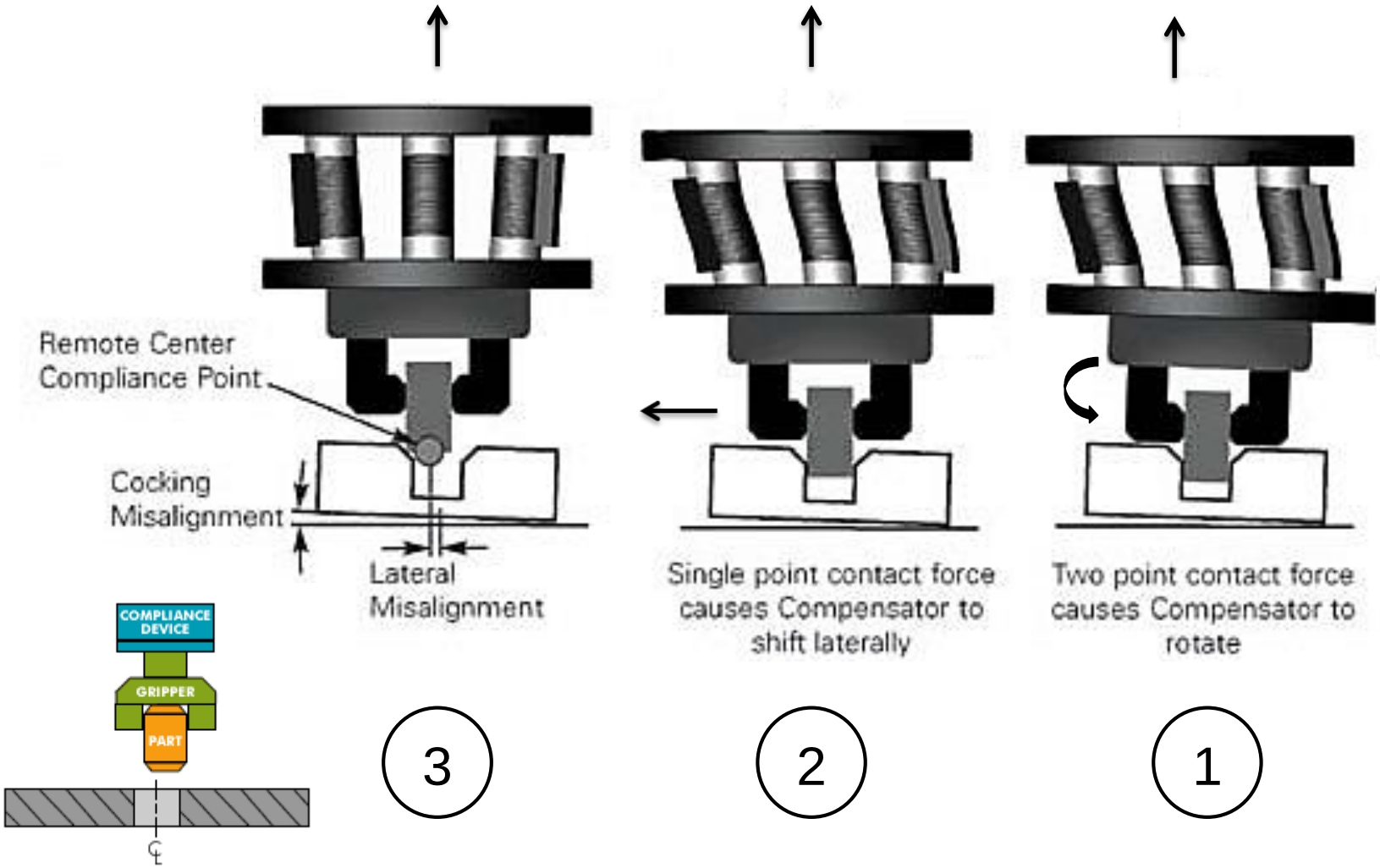

Impedance Control

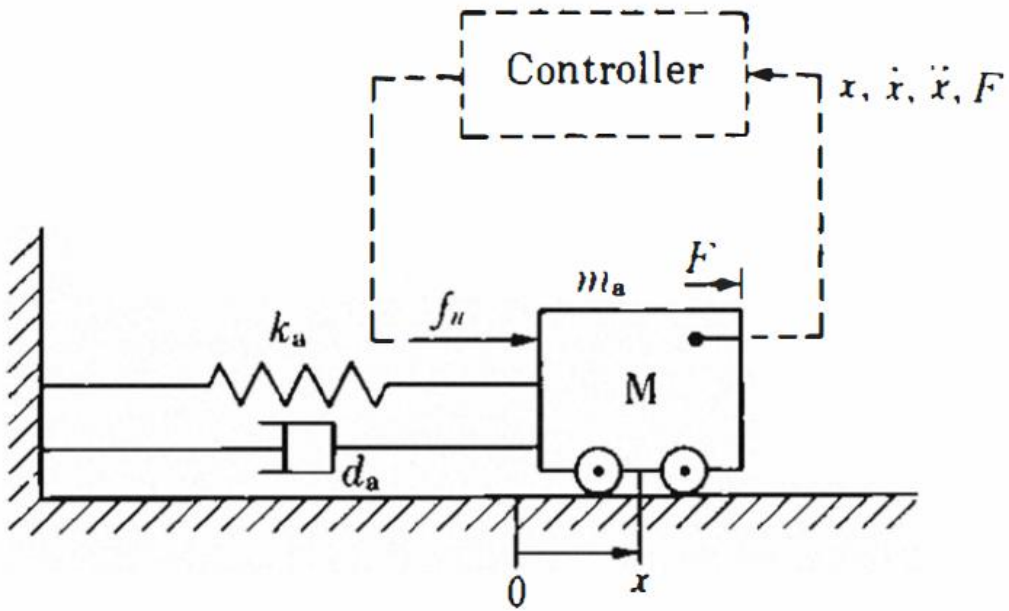

$$m_a\ddot{x} + d_a\dot{x} + k_a x = f_u + F$$

$$m_d\ddot{x} + d_d(\dot{x} - \dot{x}_d) + k_d(x - x_d) = F$$

$$f_u = (m_a - m_d)\ddot{x} + (d_a - d_d)\dot{x} + (k_a - k_d)x + d_d\dot{x}_d + k_d x_d$$

$$f_u = (d_a - d_d)\dot{x} + (k_a - k_d)x + d_d\dot{x}_d + k_d x_d$$

Collaborative Robots – Examples

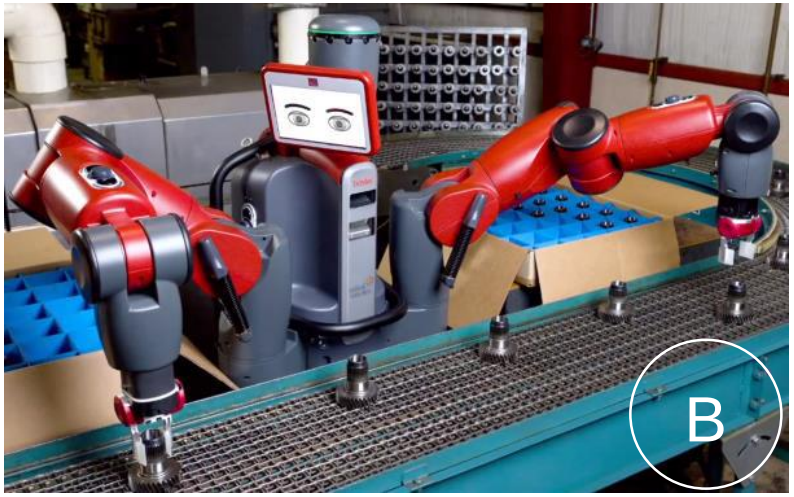

A. Kuka

B. Baxter

C. Yumi

D. Fanuc

Disassembly Sequence Planning

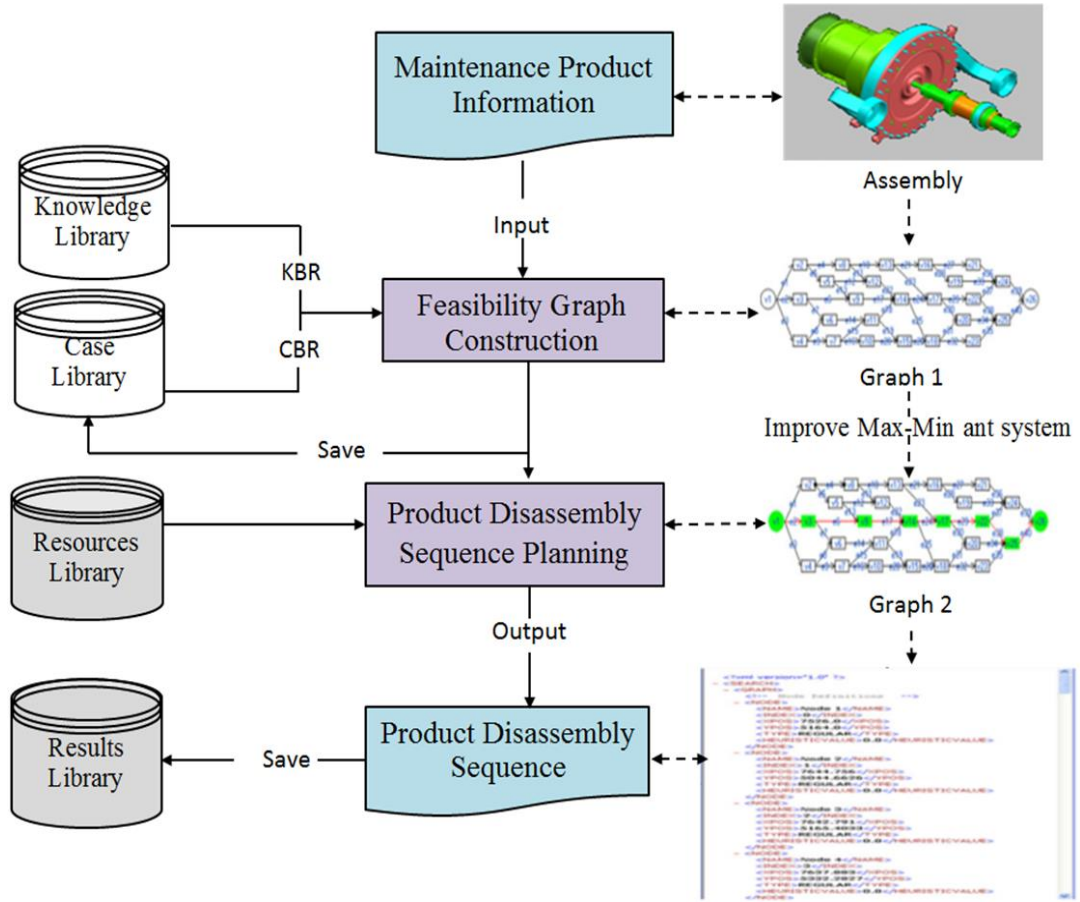

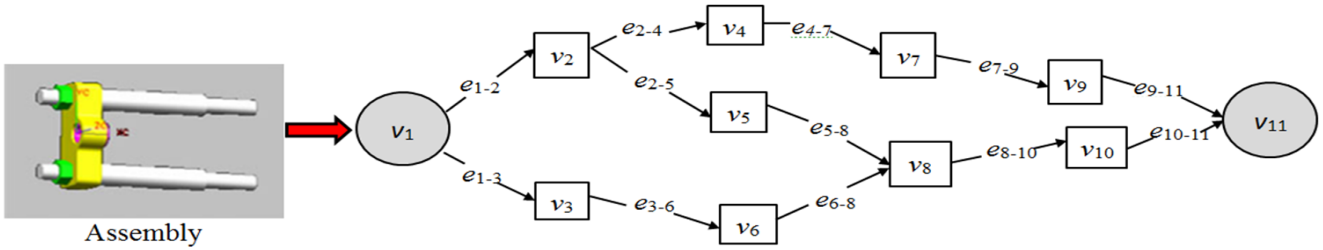

A matrix approach to selective disassembly sequence planning

A matrix approach to selective disassembly sequence planning

- Disassemble target component in optimal disassembly route

↓

Analyse product

1. Find parts that contact and are connected to the target component with a matrix.
2. Eliminate unnecessary disassembly parts by analyzing the properties of target component from the matrix.
3. Form new modules of the initial product.

↓

Determine the direction and obstacle for disassembly

1. Find the disassembly direction of fasteners with matrix
2. Detect if any obstacle to be removed before disassembling the given fastener

↓

Evaluate the optimal disassembly sequence

1. Matrices' rule to form feasible disassembly sequences
2. Guideline to optimise the disassembly sequence

↓

Remove target component

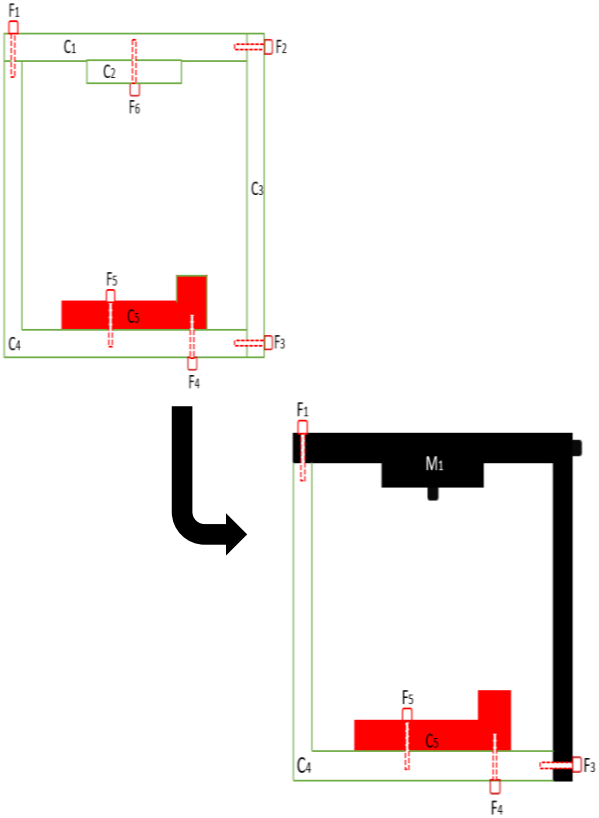

Disassembly Sequence Planning - Example

Disassembly Sequences of Water Pump

	(1)	(2)	(3)
Level 0	A B C / D E F	A B C / D E F	A B C / D E F
Level 1	A B C / D E F	A B C / D E F	A B C / D E F
Level 2	A B C / D E F	A B C / D E F	A B C / D E F
Level 3	A B C / D E F	A B C / D E F	A B C / D E F
Level 4	A B C / D E F	A B C / D E F	A B C / D E F
Level 5	A B C / D E F	A B C / D E F	A B C / D E F

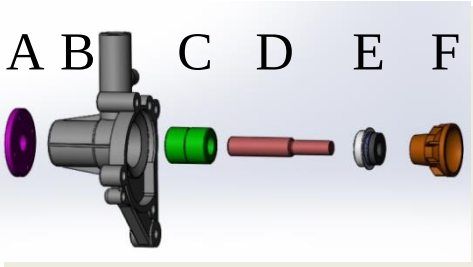

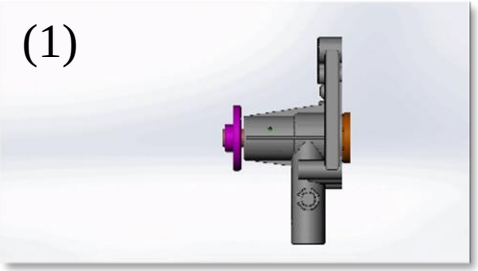

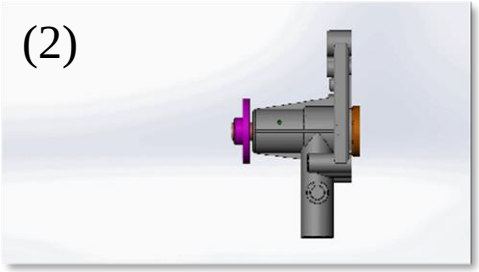

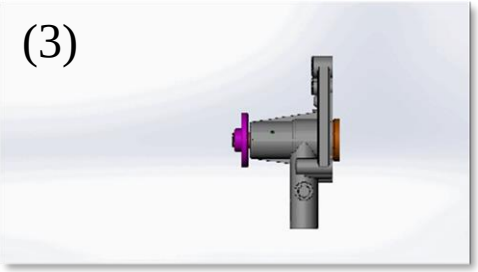

Disassembly process flow design

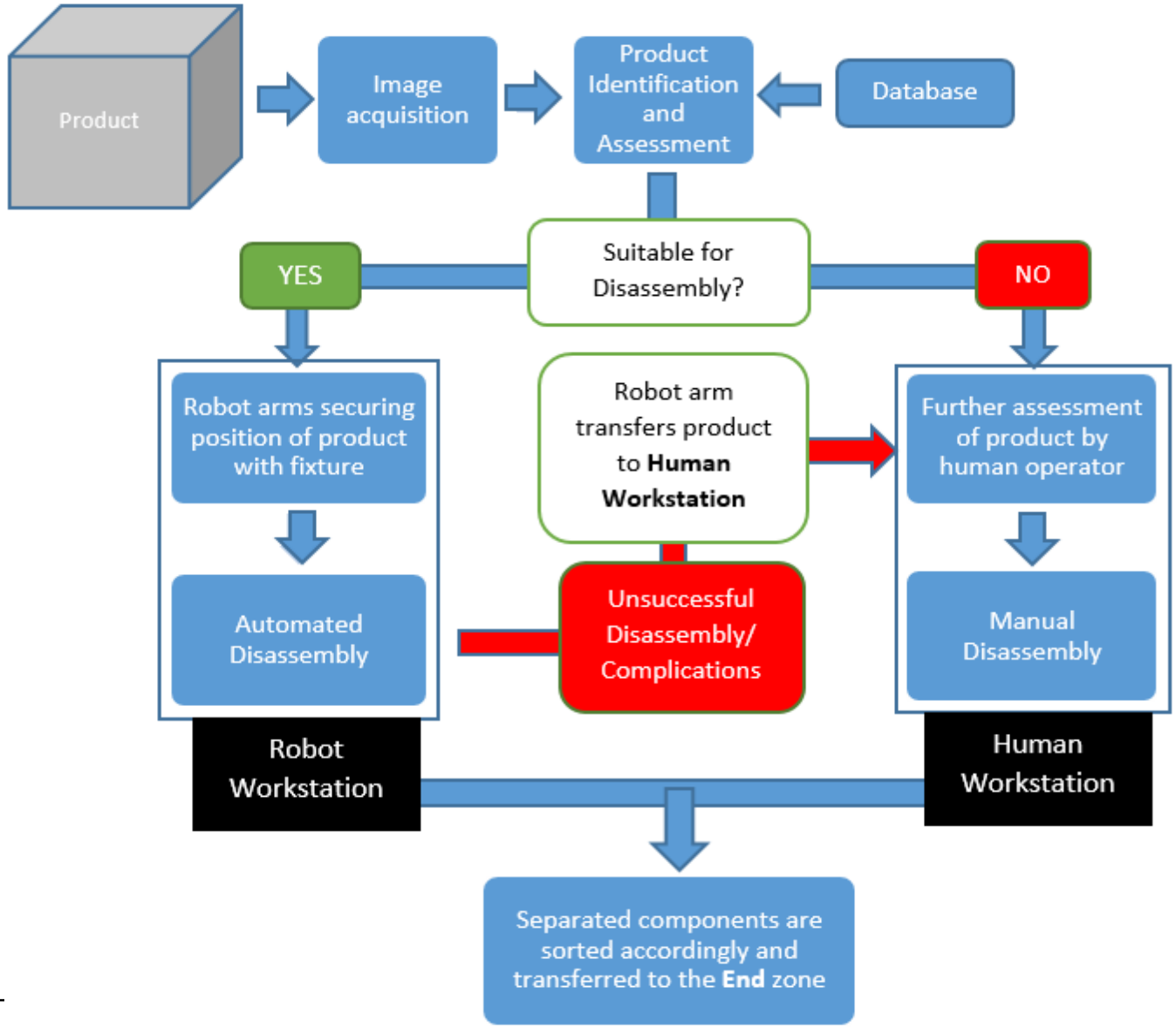

Screw drive design and unfastening effort

- Evaluate optimum screw drive design based on minimal disassembly time to minimise labour and resources cost
  - 10 common screw drive designs

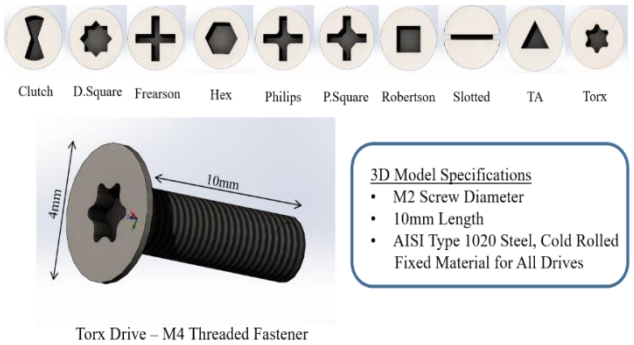

- Force analysis

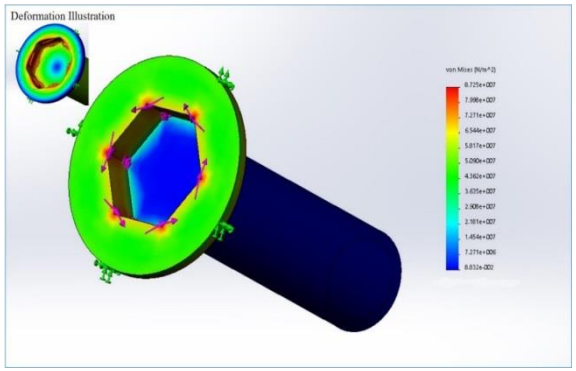

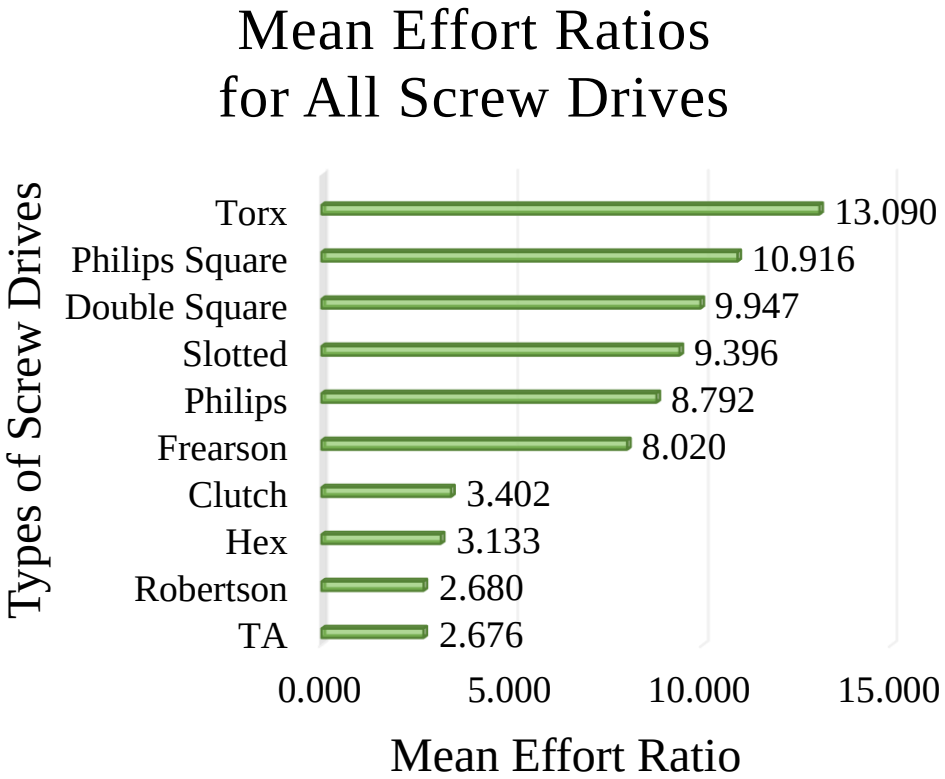

Vision recognition of mechanical parts

(i) Original image

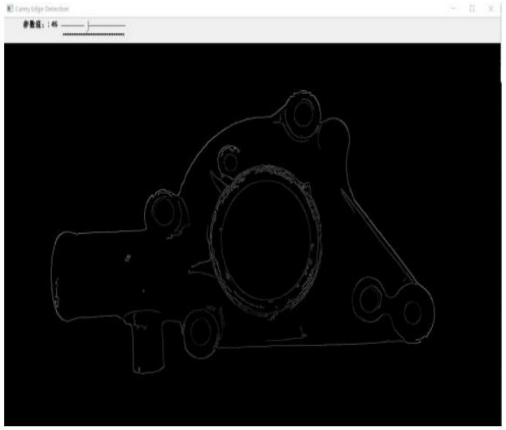

(ii) Canny Edge Detection

(iii) Sobel Edge Detection

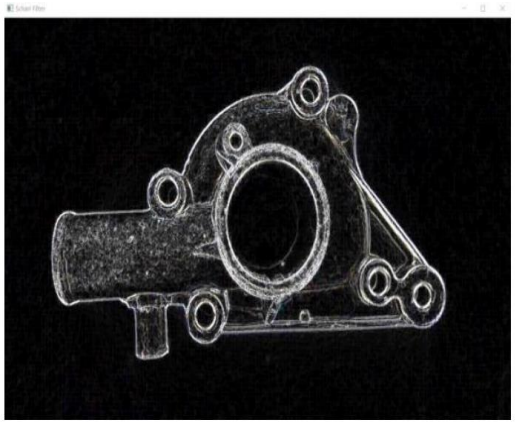

(iv) Scharr Filter Edge Detection

Training Image stored in database with Feature Descriptors

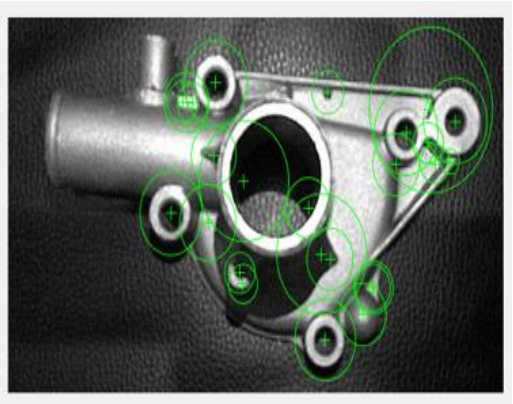

Successful match of Product with Training Image

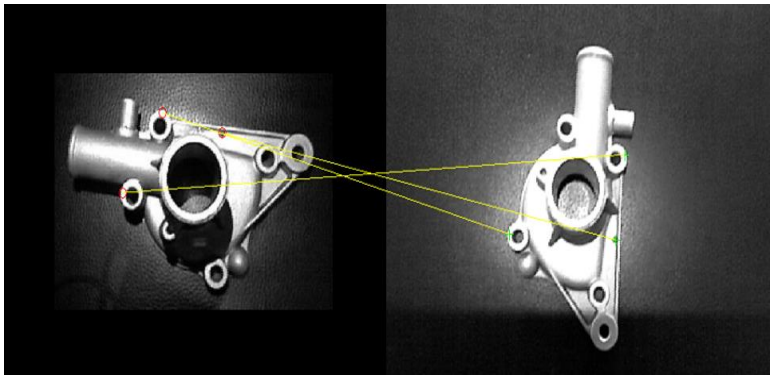

Robotic Disassembly Cell

Robotic Disassembly Cell (Semi-Autonomous, Human-Robot Collaborative)

Products

Programs

Robotic Disassembly Cell

Controller
- Controller, smartPAD, PC

Vision
- Camera, kinect devices

Sensors
- Force / Torque sensor

Manipulators
- KUKA LBR iiwa 14 R820 x 2

Human
- Hands, eyes, brain

Tools
- Gripper, unscrewdriver, press machine, etc.

Fixtures
- Workbench, fixtures, position devices

Parts / Components of Products

Robotic Disassembly Cell – Water Pump

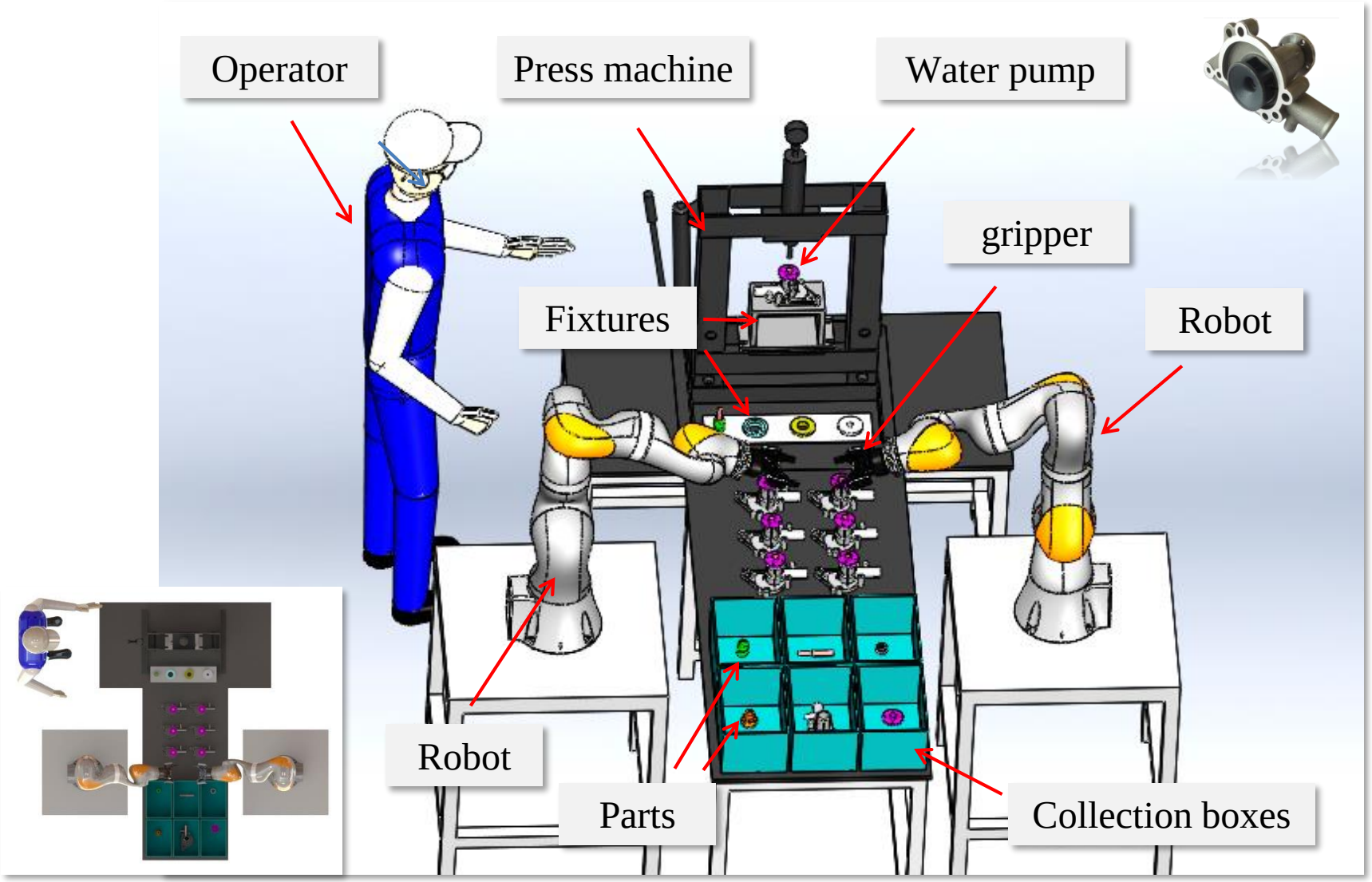

4. Remanufacturing and Re-distributed Manufacturing

- Uncertainties in remanufacturing – *Quality*, *quantity* and *timing* of returned cores and variability in processing times
- Reduction or elimination of uncertainties with IoT technologies
- Smart embedded sensing, tracking and communication devices
- Continuous monitoring of machine and product condition
- Accurate prediction of *Remaining Useful Life*
- Complete record of lifecycle data for a product
- Potential to use data collected from past lifecycles to help effective deployment of remanufactured products

B Esmaeilian, S Behdad and B Wang (2016) The evolution and future of manufacturing: A review

4. eSystems Engineering for Reverse Logistics

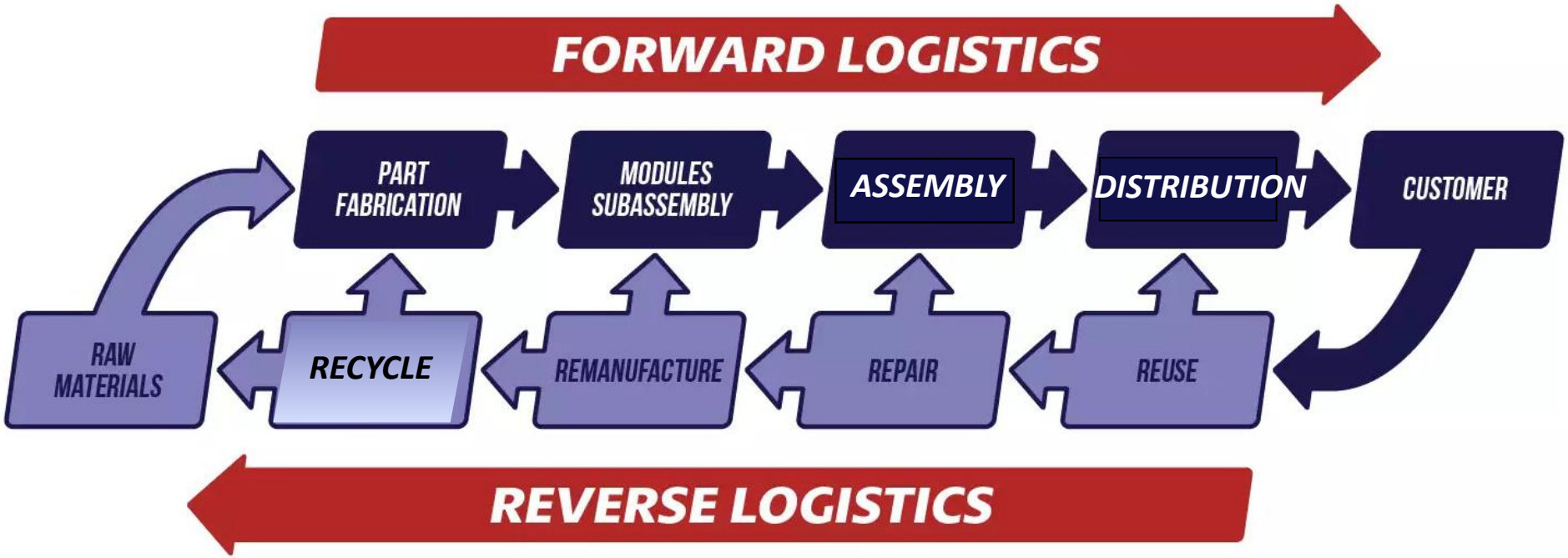

Goods visibility: cloud-based GPS and RFID technologies providing identity, location, and other tracking details of goods in storage and transit;

Fleet visibility: telematics using real-time sensor information and environmental data (weather and traffic) to increase agility and efficiency.

http://cerasis.com/2014/02/19/what-is-reverse-logistics/
http://www.amertranslogistics.com/services/reverse-logistics/

4. RFID in the Supply Chain – from Manufacturer to Retailer

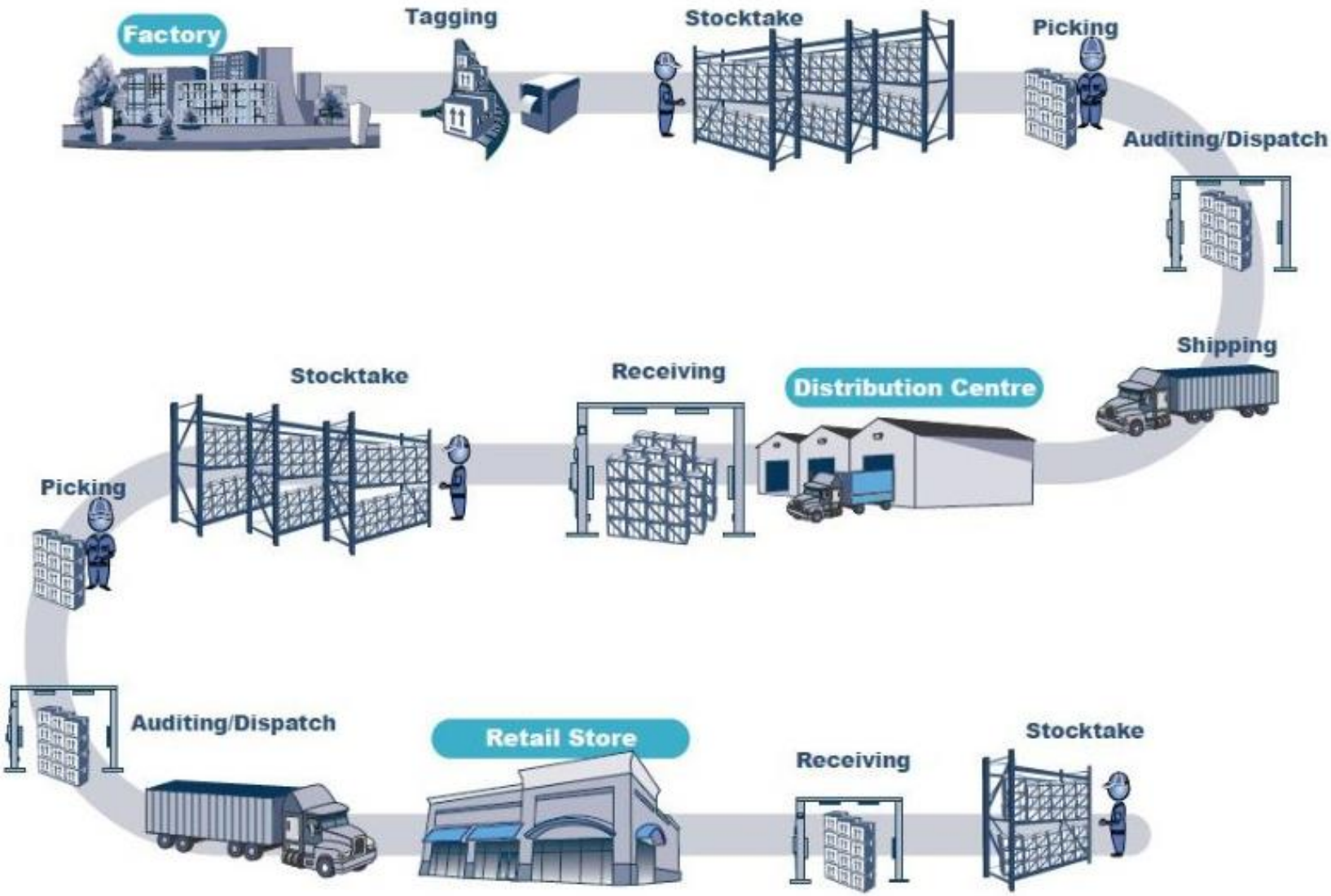

https://www.iotuniversity.com/2016/04/rfid-enabled-supply-chain-visibility/

5. Team: UoB

- Dr Chunqian Ji, Senior Research Fellow
- Dr Shizhong Su, Senior Research Fellow
- Dr Yongjing Wang, Research Fellow
- Dr Jun Huang, Research Fellow
- Dr Yilin Fang, Visiting Academic
- Dr Jun Guo, Visiting Academic
- Dr Xuemei Jiang, Visiting Academic
- Jiayi Liu, Visiting PhD Researcher
- Soran Parsa, PhD Researcher
- Senjing Zheng, PhD Researcher
- Dr Robert Cripps
- Dr Mozafar Saadat
- Dr Marco Castellani
- Dr Khamis Essa

5. Team: Partners

Users	Role
Caterpillar	▪ Advisory board ▪ Industrial validation ▪ Product/component provision ▪ Exploitation
Meritor	
MG Motor	

Technology Translators	Role
HSSMI	▪ Advisory board ▪ Technical input ▪ Collaborative research ▪ Dissemination
MTC	

5. Team: International Partners

Universities	Focus
Wuhan University of Technology, China (Professor Zude Zhou; Professor Quan Liu; Dr Wenjun Xu)	▪ Disassembly planning ▪ Disassembly economics
University of Castilla-La Mancha, Spain (Dr Francisco Javier Ramírez Fernandez)	

5. Team: Autonomous Remanufacturing (AutoReman) Network

Join us for free.

Email: autoreman@contacts.bham.ac.uk

Web: http://autoreman.altervista.org/index.html

Karmenu Vella - *With the circular economy, we are looking at a triple win. Society can win through job creation, savings for businesses and lower carbon emissions. It's a major opportunity – let's make sure we grasp it.*